Heavy Duty Ceiling Grid

TechGrid

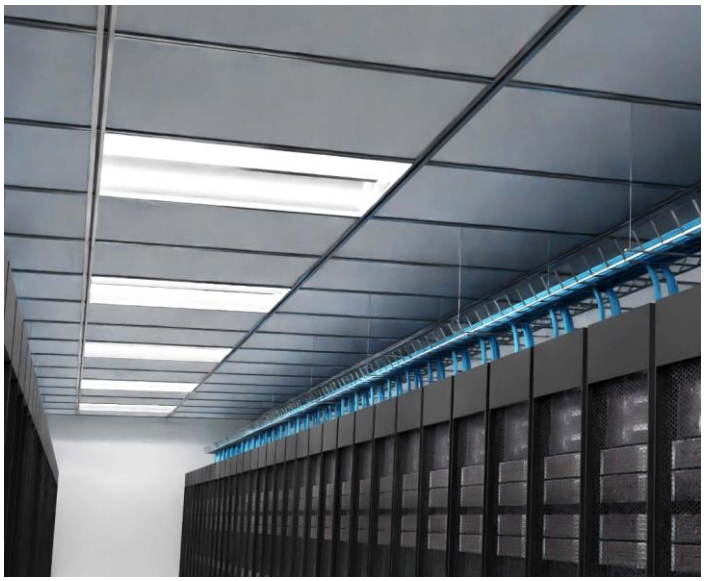

TechGrid is heavy duty grid ceiling frame engineered to support ceiling tiles and suspended loads.

The grid uses a single extruded aluminium profile for both primary and secondary members designed to allow easy fitting of suspensions in the form of threaded rods at any point on the grid.

This feature provides the designer flexibility to attach suspension points to suspend cable tray, light fittings, equipment, etc.

Features

- Quick and easy installation
- Engineered to support heavy loads
- Versatile to meet various load requirements and grid configuration
- Interchangeable parts minimises inventory
- Anodised finished aluminium profile provides excellent corrosion resistance

Engineered Profile

The **TechGrid** is a proprietary profile extruded from structural grade aluminium (6063). Standard profiles are finished in natural anodise. Specifiers has the option to select coloured profiles which will be finished in powder coating for aesthetic enhancement.

The profile is designed to support heavy loads. In addition to ceiling boards/tiles, the grid can support loads from equipment, electrical/data cables etc. and can also designed to be trafficable with walkway mounted over the ceiling frame.

This system is suitable for application in Data Centers where the ceiling grids are required to support cables and larger span to avoid services.

The profile is designed with a built in track on top and bottom to allow easy fixing of suspension and picking up loads below. The suspension assembly can be adjusted laterally and additional suspensions added without hassle.

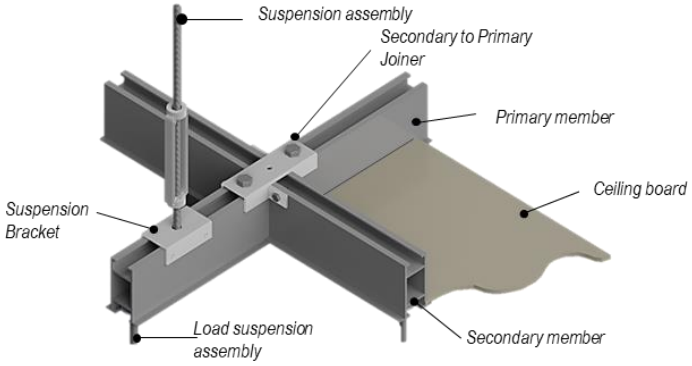

TechGrid Aluminium Profile

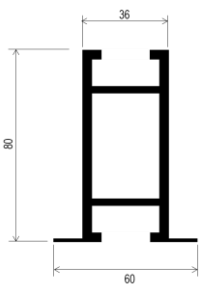

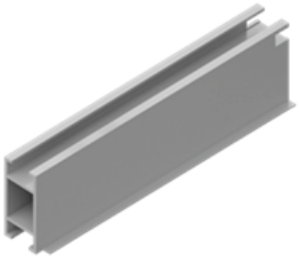

Heavy Duty Ceiling Grid

TechGrid

Components

The **TechGrid** ceiling system comprised a handful of components which includes primary and secondary members, joiners, suspension assembly complete with turnbuckle for levelling and load suspension assembly.

All steel components are in galvanised finish.

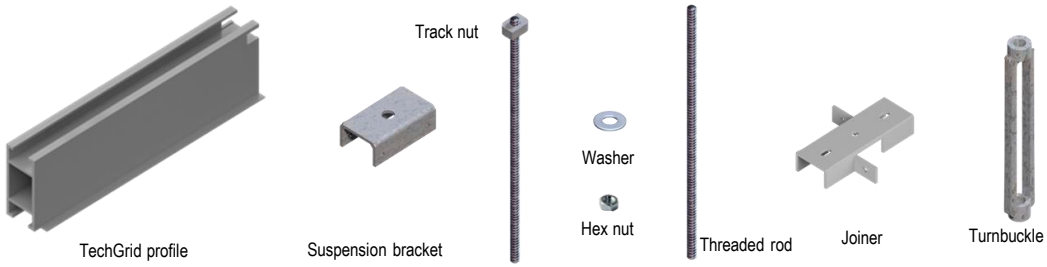

The suspensions are in the form of M8 or M10 threaded rods (depending on loading requirements) which can be easily attached to sub-frames or directly to main structure with standard beam clamps. The same can be attached to underside of concrete slab and beams with internally threaded expansion anchors.

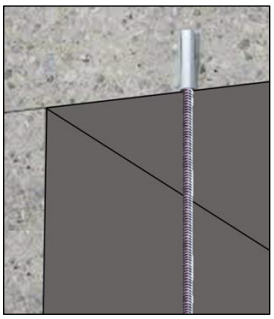

Fixing to r.c. structure

Fixing to steel structure

Load Table

Span	Concentrated Load (kg)	Linear Load (kg/m)	Uniform Dist. Load (kg/m^2)
1200	630	525	438
1500	295	246	205

Note : *Based on primary member spaced at 1200mm centers and 10mm maximum deflection.*

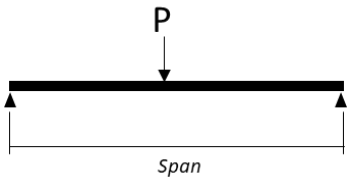

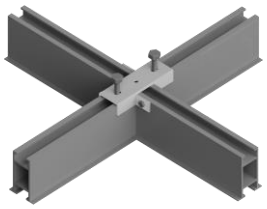

Joining secondary to primary section

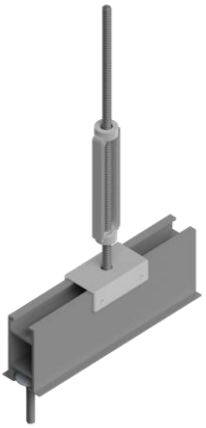

Suspension assembly

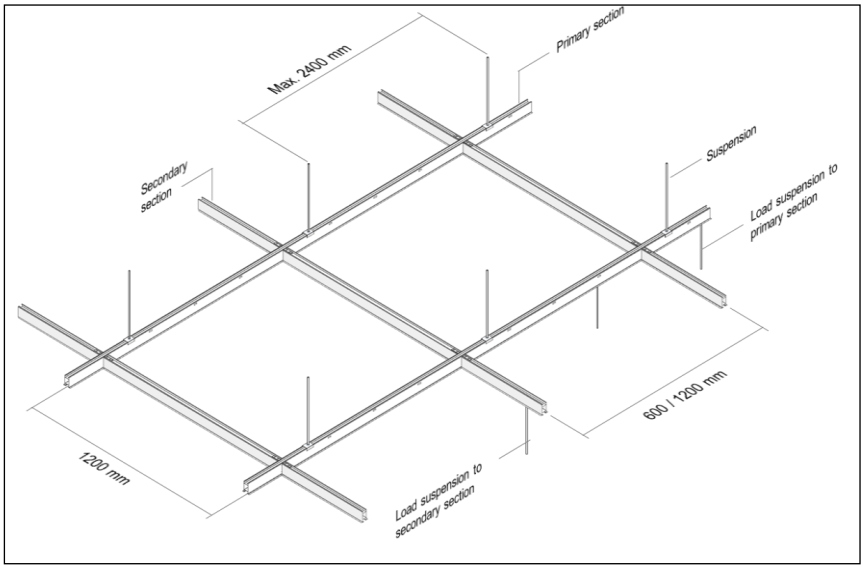

Grid configuration

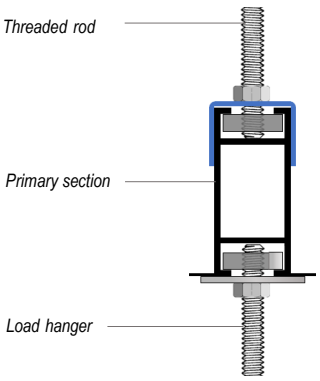

SECTION - Suspension assembly

Manufactured by Technoframe Solutions Sdn. Bhd. | *Tel. +60 3 6091 8988* | *E-mail : sales@technoframe.com.my*